Symbol	Date	Rev. by	Notice	Check
△1 x 7	220414	Shibata	IMPROVE	
△2 x				
△3 x				
△4 x				

NIKKEN KOSAKUSHO WORKS., LTD. All Rights Reserved.

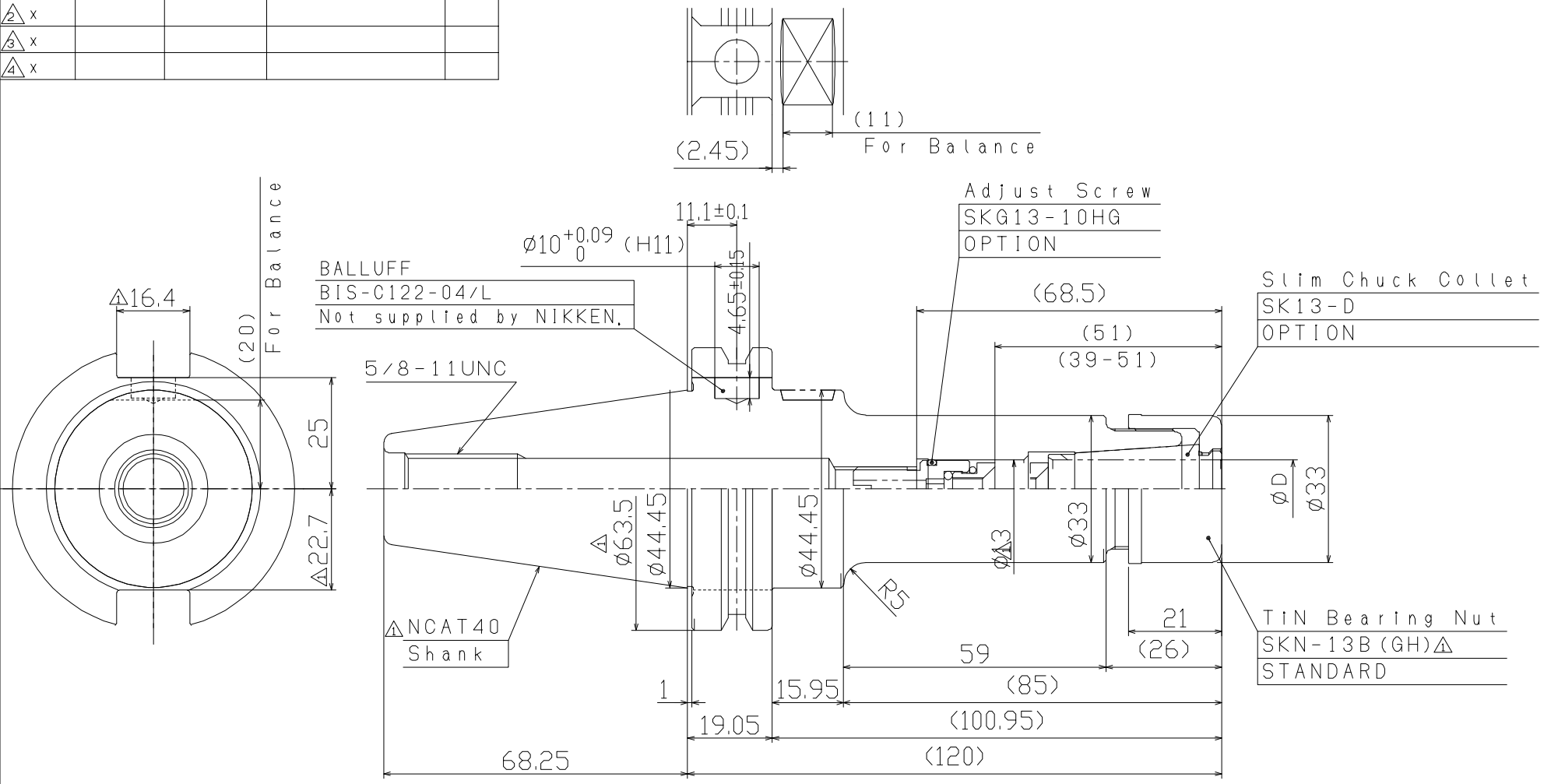

NOTE

MAX. 30,000r/min & G2.5

Center Through MAX. 7MPa

△1 Spanner:GH12 (OPTION)

KIND	TITLE	CUSTOMER		
SK13H	HIGH SPEED SLIM CHUCK for Center Through			
MACHINE MODEL	CODE NO.	DESIGNED	CHECKED	APPROVED
	NCAT40-SK13C-120UP-IDU	S.Maemura		
SCALE 1:1	NIKKEN KOSAKUSHO WORKS, LTD.	DIR-NAME	SKA1	
DATE 2016.04.19		DRWG NO.	SKA41-47006/1	