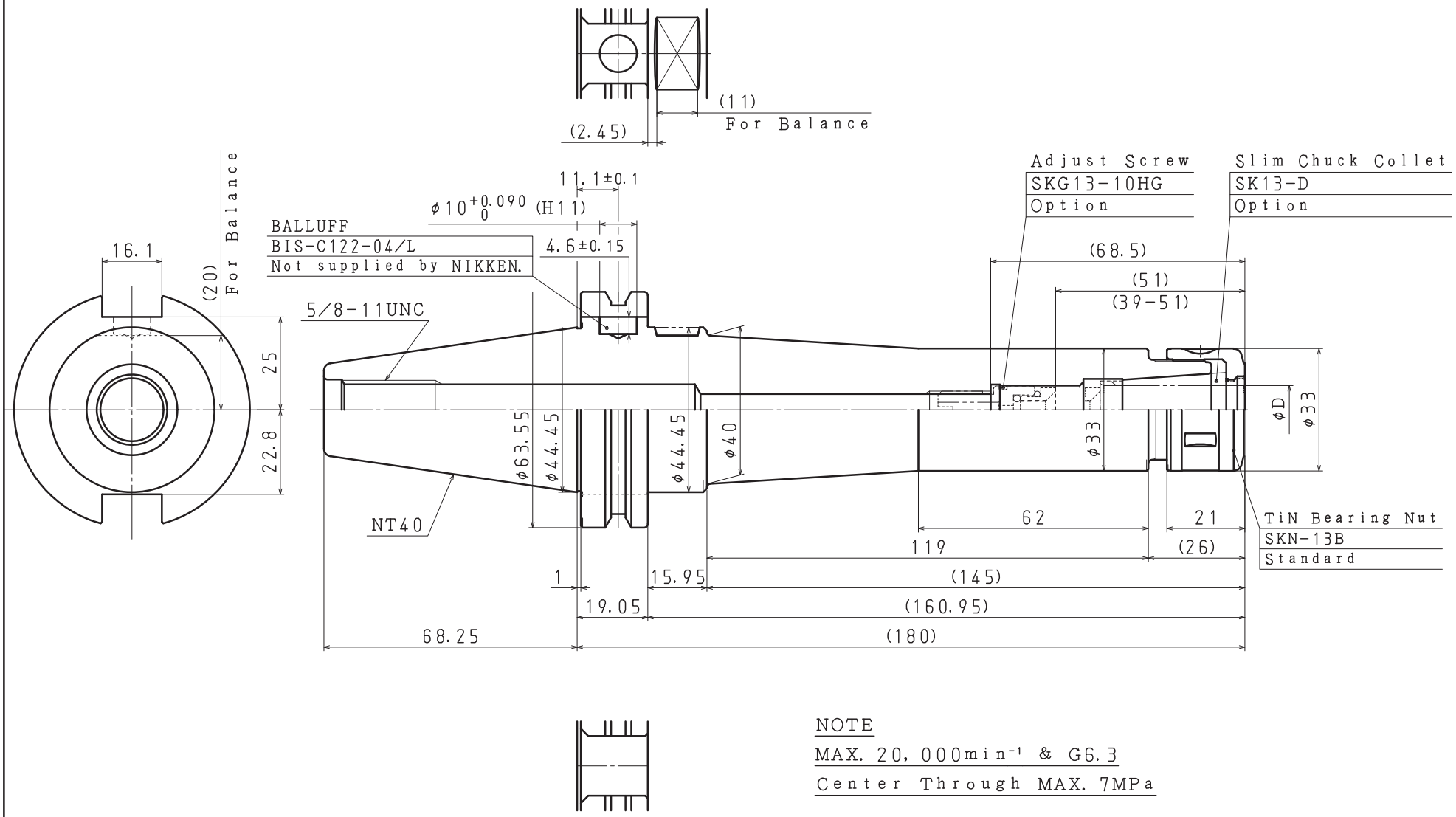

NOTE

MAX. 20,000min⁻¹ & G6.3

Center Through MAX. 7MPa

KIND	TITLE	CUSTOMER		
SK13H	High Speed Slim Chuck for Center Through			
MACHINE MODEL	CODE NO.	DESIGNED	CHECKED	APPROVED
	NCAT40-SK13C-180U-IDU	S.Maemura		E.Nakai
SCALE 1/1	NIKKEN KOSAKUSHO WORKS, LTD.	DIR-NAME	SKA1	
DATE 2016.04.19		DRWG NO.	SKA41-47004/0	