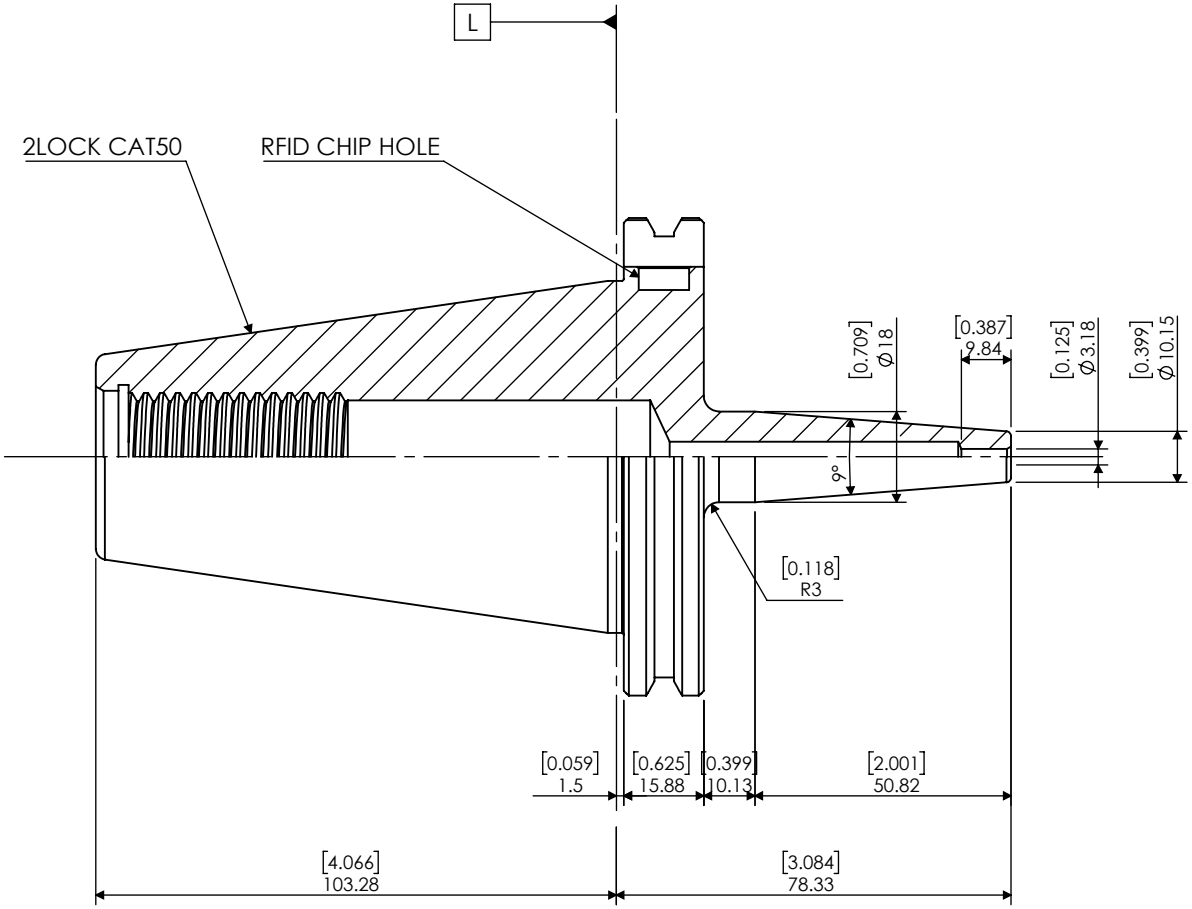

PROPRIETARY AND CONFIDENTIAL

THE INFORMATION CONTAINED IN THIS DRAWING IS THE SOLE PROPERTY OF LYNDEX NIKKEN. ANY REPRODUCTION IN PART OR AS A WHOLE WITHOUT THE WRITTEN PERMISSION OF LYNDEX NIKKEN IS PROHIBITED. DRAWING SUBJECT TO CHANGE WITHOUT NOTICE.

	NAME	DATE
DRAWN	BT	10/18/2021

NOTES:

NCAT50 Dual Contact Shrink Fit Holder 1/8"

LYNDEX NIKKEN

SIZE	DWG. NO.	REV.
A	NCAT50-SF0125-3.15	
SCALE 1:1.5		SHEET 1 OF 1

5 4 3 2 1