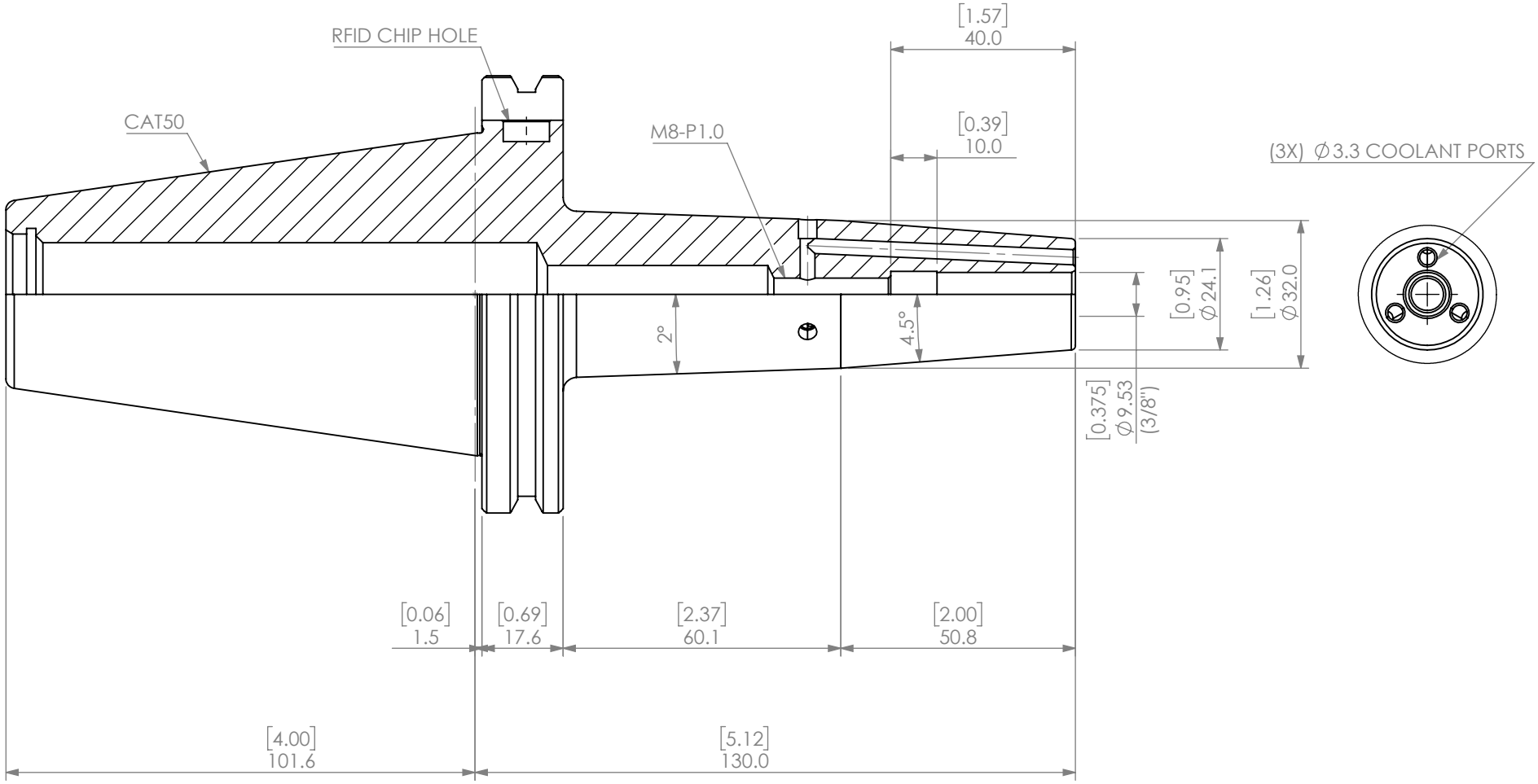

REVISIONS			
REV.	DESCRIPTION	DATE	APPROVED

Notes:

B/U SCREW: SF-STOP-SCREW-10

UNLESS OTHERWISE SPECIFIED:

DIMENSIONS ARE IN MM [INCH]
TOLERANCES:
FRACTIONAL ±
ANGULAR: MACH ± BEND ±
TWO PLACE DECIMAL ±
THREE PLACE DECIMAL ±

INTERPRET GEOMETRIC TOLERANCING PER: ANSI Y 14.5M

THIRD ANGLE PROJECTION

	NAME	DATE
DRAWN	AM	09/18/20
CHECKED		
ENG APPR.		
MFG APPR.		
Q.A.		

PROPRIETARY AND CONFIDENTIAL
THE INFORMATION CONTAINED IN THIS DRAWING IS THE SOLE PROPERTY OF LYNDEX NIKKEN. ANY REPRODUCTION IN PART OR AS A WHOLE WITHOUT THE WRITTEN PERMISSION OF LYNDEX NIKKEN IS PROHIBITED.

CAT50 3/8" COOLANT SHRINK FIT HOLDER (TAPER PLUS)

LYNDEX NIKKEN

SIZE	DWG. NO.	REV
A	NCAT50-SF0375-5.12CP	

SCALE:3:4 SHEET 1 OF 1

5 4 3 2 1