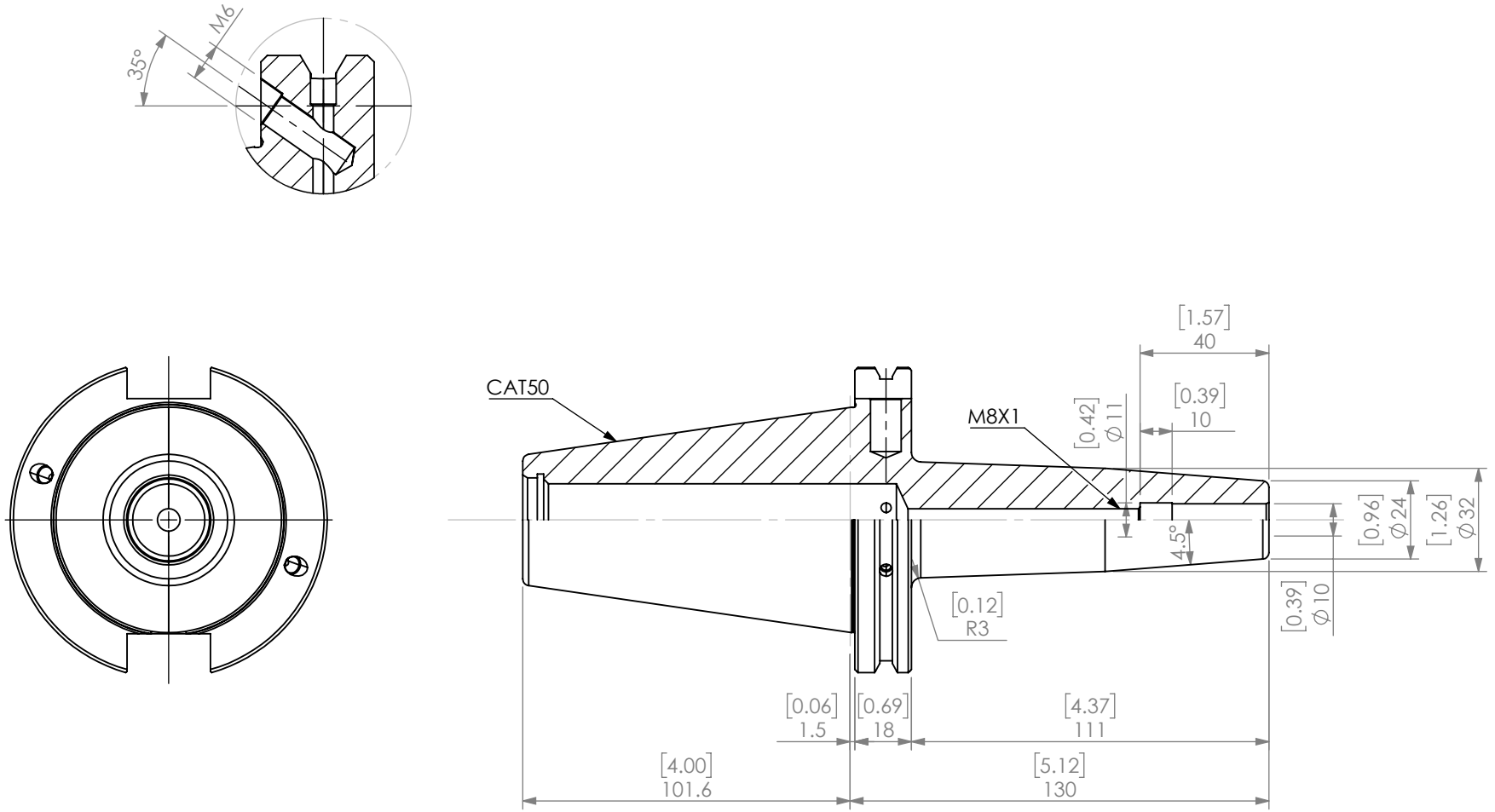

PROPRIETARY AND CONFIDENTIAL

THE INFORMATION CONTAINED IN THIS DRAWING IS THE SOLE PROPERTY OF LYNDEX NIKKEN. ANY REPRODUCTION IN PART OR AS A WHOLE WITHOUT THE WRITTEN PERMISSION OF LYNDEX NIKKEN IS PROHIBITED. DRAWING SUBJECT TO CHANGE WITHOUT NOTICE.

	NAME	DATE
DRAWN	JA	11/30/2020

NOTES:
B/U SCREW#: SF-STOP-SCREW-10

CAT50 10mm SHRINK FIT HOLDER (TAPER PLUS)

LYNDEX NIKKEN

SIZE	DWG. NO.	REV.
A	NCAT50-SF10-130	
SCALE 1:2		SHEET 1 OF 1

5 4 3 2 1