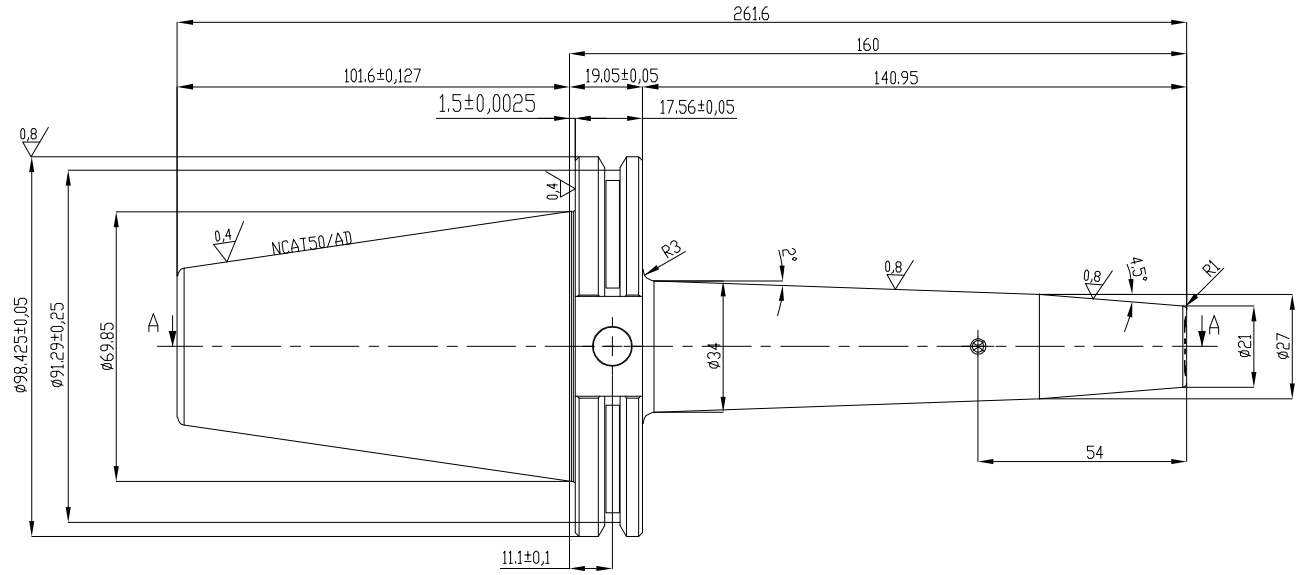

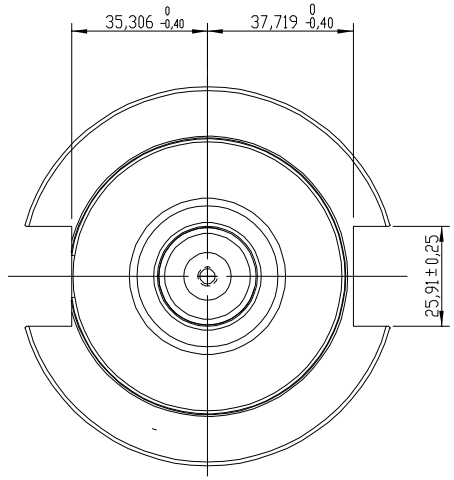

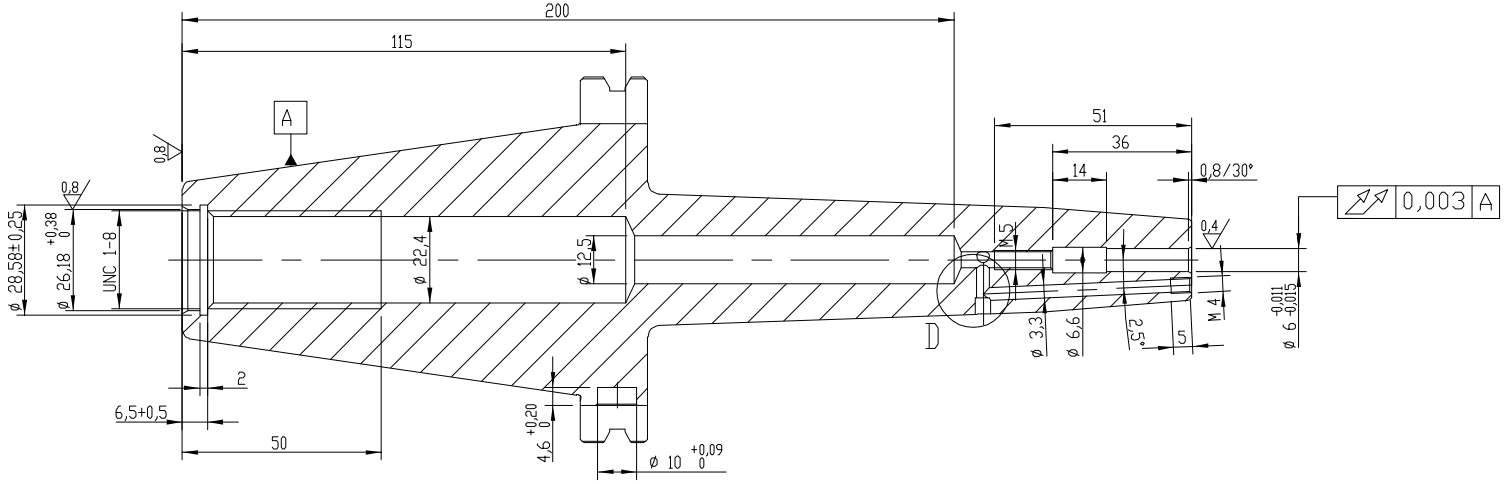

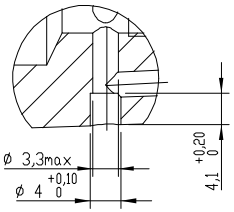

54 - 2 HRc G2,5/25000

	ITEM		QTY
	XXXXXXX		0
	Back-up screw M5x10		1
	BODY	X38CrMoV5-1	1

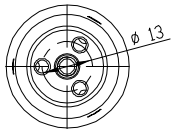

PROPEITY AND CONFIDENTIAL
THE INFORMATION CONTAINED IN THIS DRAWING IS THE SOLE PROPERTY OF LYNDEX-NIKKEN. ANY REPRODUCTION IN PART, OR AS A WHOLE WITHOUT THE WRITTEN PERMISSION OF LYNDEX-NIKKEN IS PROHIBITED.

Shrink Fit Holder / ANSI CAT50-TaperPlus

Ø6 * 160

SCALE				
1/2				

LYNDEX NIKKEN

NCAT50-SF6-160CP