Mark	Date	Name	Revision
1 ×			
2 ×			
3 ×			
4 ×			

NIKKEN KOSAKUSHO WORKS., LTD. All Rights Reserved.

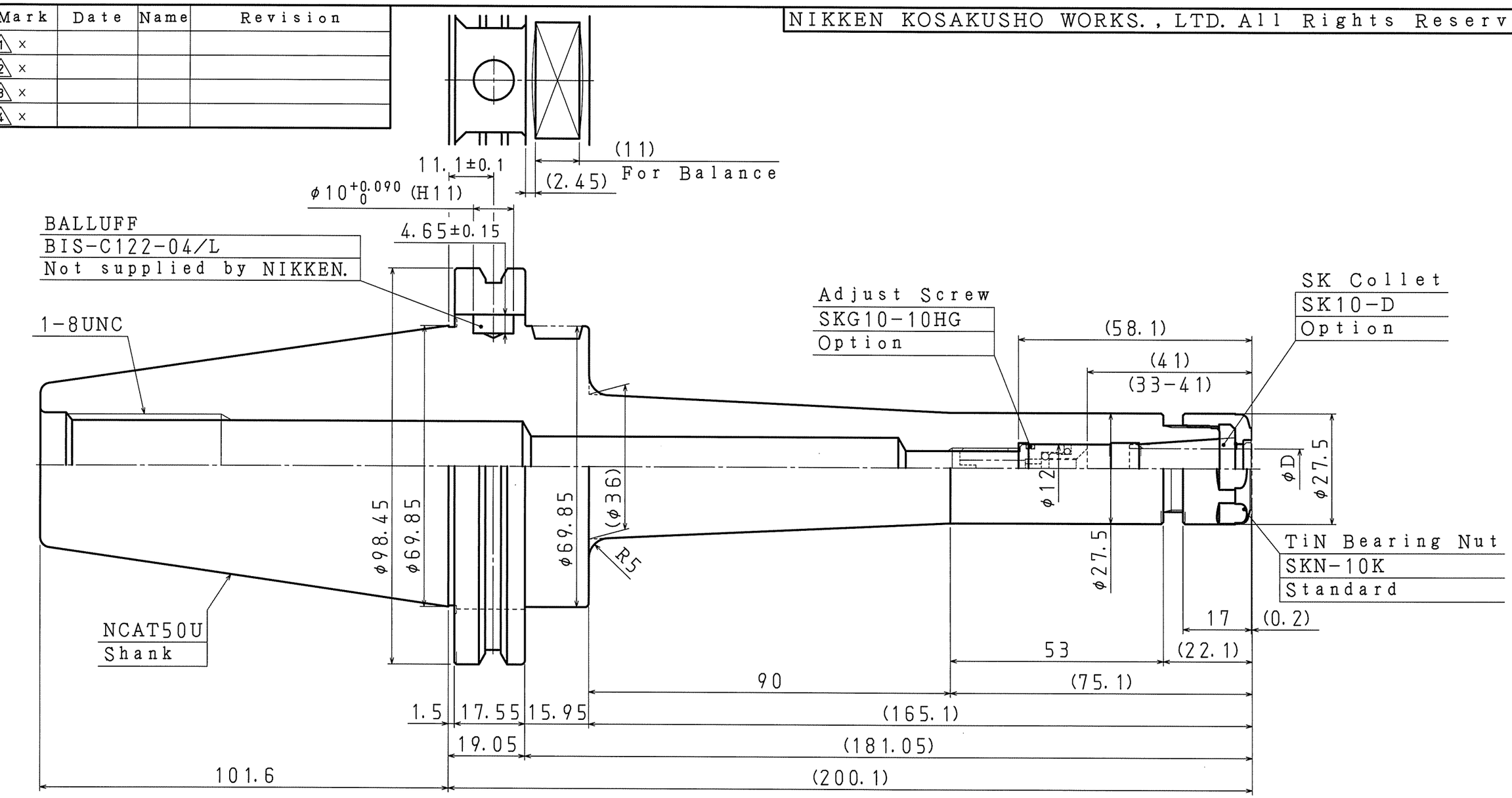

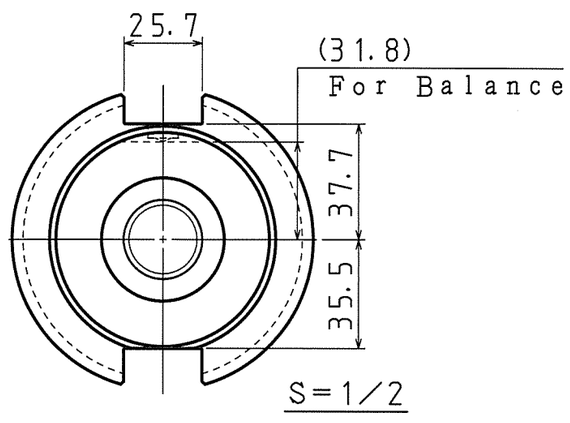

NOTE

Center Through MAX. 7MPa

Spanner:SKL-10 (Option)

KIND SK10	TITLE Slim Chuck with Center Through	CUSTOMER		
MACHINE MODEL	CODE NO. NCAT50-SK10C-200U-IDU	DESIGNED S. CHIKAMURA	CHECKED	APPROVED
SCALE 1:1 (1:2)	NIKKEN KOSAKUSHO WORKS, LTD.	DIR-NAME SKA1		
DATE 2025.07.15		DRWG NO. SKA11-48012/0		