Symbol	Date	Rev.by	Notice	Check
1 x				
2 x				
3 x				
4 x				

NIKKEN KOSAKUSHO WORKS.,LTD.All Rights Reserved .

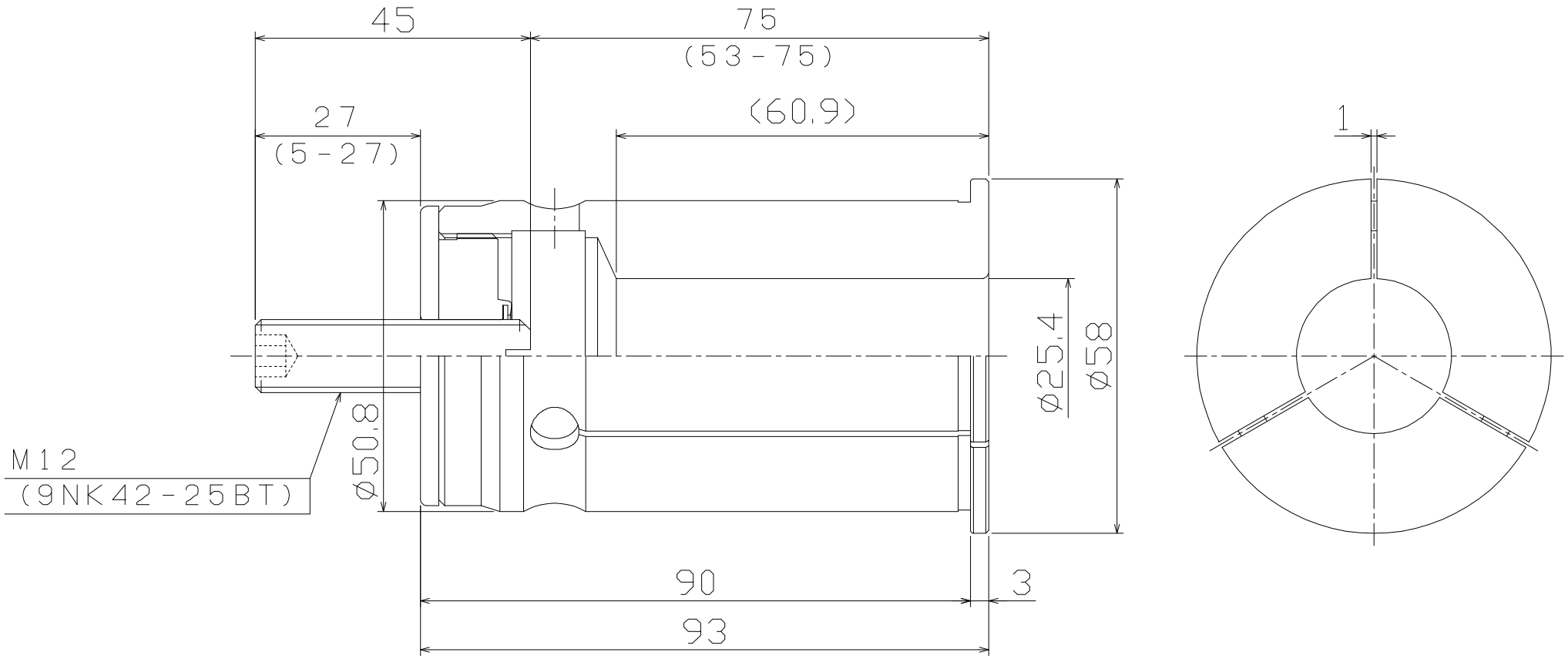

KIND NK2	TITLE STRAIGHT COLLET	CUSTOMER		
MACHINE MODEL	CODE NO. NK2-1	DESIGNED S. CHIKAMURA	CHECKED	APPROVED
SCALE 1 : 1	NIKKEN KOSAKUSHO WORKS, LTD.	DIR-NAME	CKA1	
DATE 2023. 09. 20		DRWG NO.	CKA10-02116/0	