Symbol	Date	Rev. by	Notice	Check
1 x 3	230123	Y. N	Improve	
2 x				
3 x				
4 x				

NIKKEN KOSAKUSHO WORKS., LTD. ALL Rights Reserved

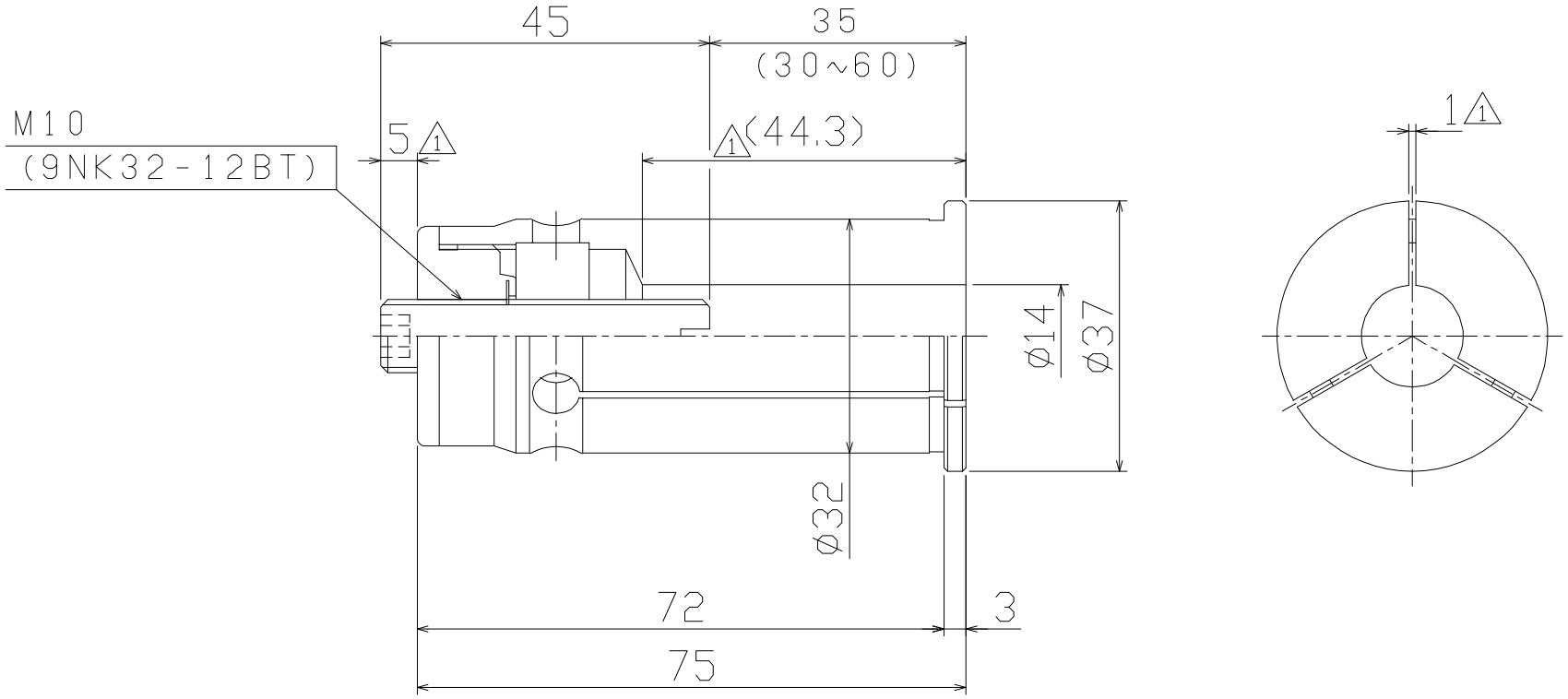

KIND NK32	TITLE STRAIGHT COLLET	CUSTOMER		
MACHINE MODEL	CODE NO. NK32-14	DESIGNED MAEMURA	CHECKED	APPROVED
SCALE 1:1	NIKKEN KOSAKUSHO WORKS, LTD.	DIR-NAME	CKA1	
DATE 2007. 04. 05		DRWG NO.	CKA04-02013/1	