Symbol	Date	Rev. by	Notice	Check
△1 x 3	230124	Y. N	Improve	
△2 x				
△3 x				
△4 x				

NIKKEN KOSAKUSHO WORKS., LTD. ALL Rights Reserved

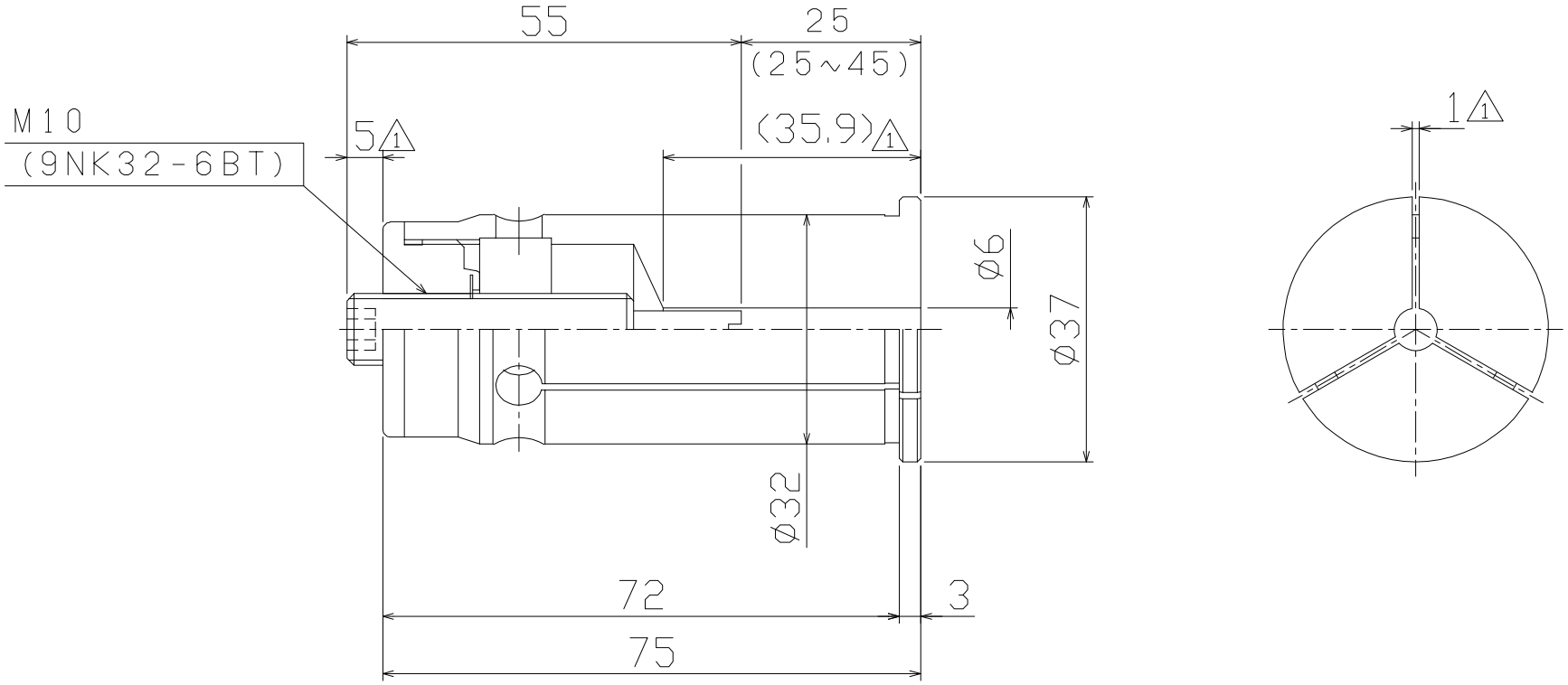

KIND	TITLE STRAIGHT COLLET	CUSTOMER		
MACHINE MODEL	CODE NO. NK32-6	DESIGNED KUGIMIYA	CHECKED	APPROVED YAMAMOTO
SCALE 1:1	NIKKEN KOSAKUSHO WORKS, LTD.	DIR-NAME	CKA1	
DATE 2005. 03. 23		DRWG NO.	CKA04-02005/1	