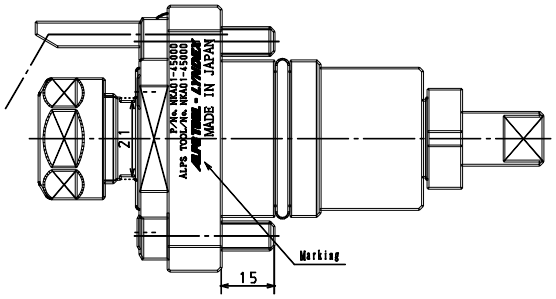

Specifications

1. Max. revolving speed			6,000min⁻¹
2. Drill diameter			Max. φ14mm
3. Collet chuck	For drilling AR20-D	(Alps tool)	(to be prepared separately)
4. accessory	Bolt M8×30L (4P)		
5. Tools	Single ended spanner SP-30 (1P)		(accessory)
	Single ended spanner SP-21 (1P)		(accessory)
6. Recommended NA25S nut tightening torque			44ft-lbs (60N・m)

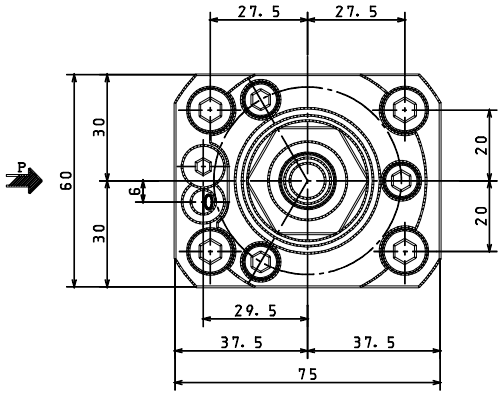

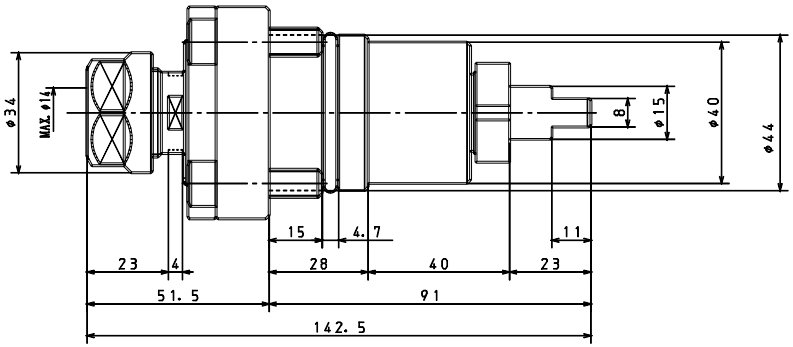

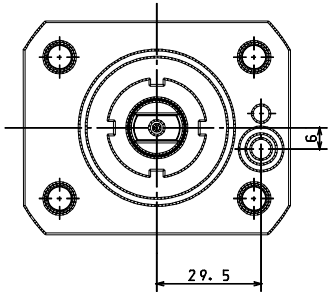

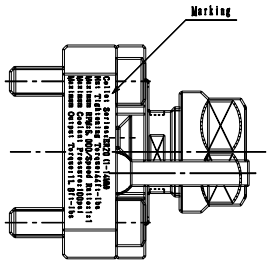

P VIEW

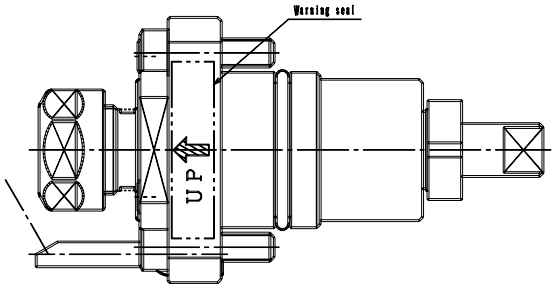

PROPRIETARY AND CONFIDENTIAL

THE INFORMATION CONTAINED IN THIS DRAWING IS THE SOLE PROPERTY OF LYNDEX NIKKEN. ANY REPRODUCTION IN PART OR AS A WHOLE WITHOUT THE WRITTEN PERMISSION OF LYNDEX NIKKEN IS PROHIBITED. DRAWING SUBJECT TO CHANGE WITHOUT NOTICE.

NOTES:

Nakamura Live ER20

LYNDEX NIKKEN

SIZE	DWG. NO.	REV.
A	NKA01-45000	1
SCALE		SHEET 1 OF 1

5 4 3 2 1