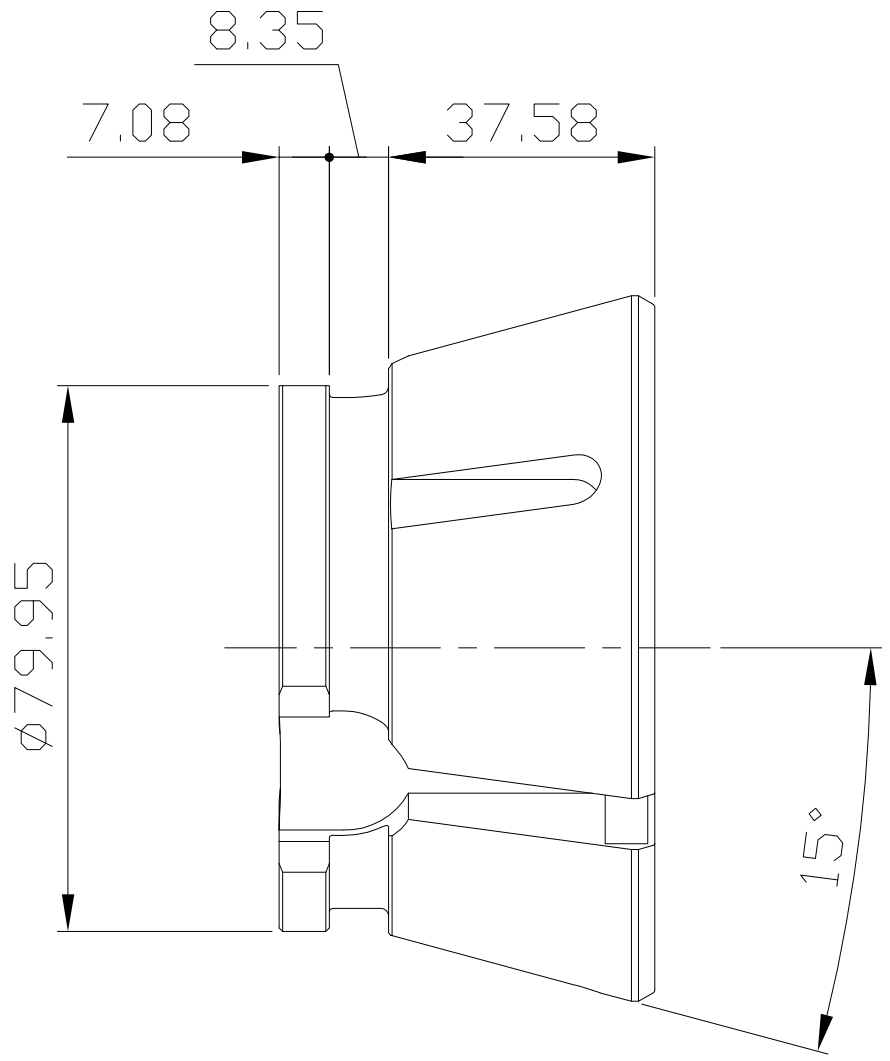

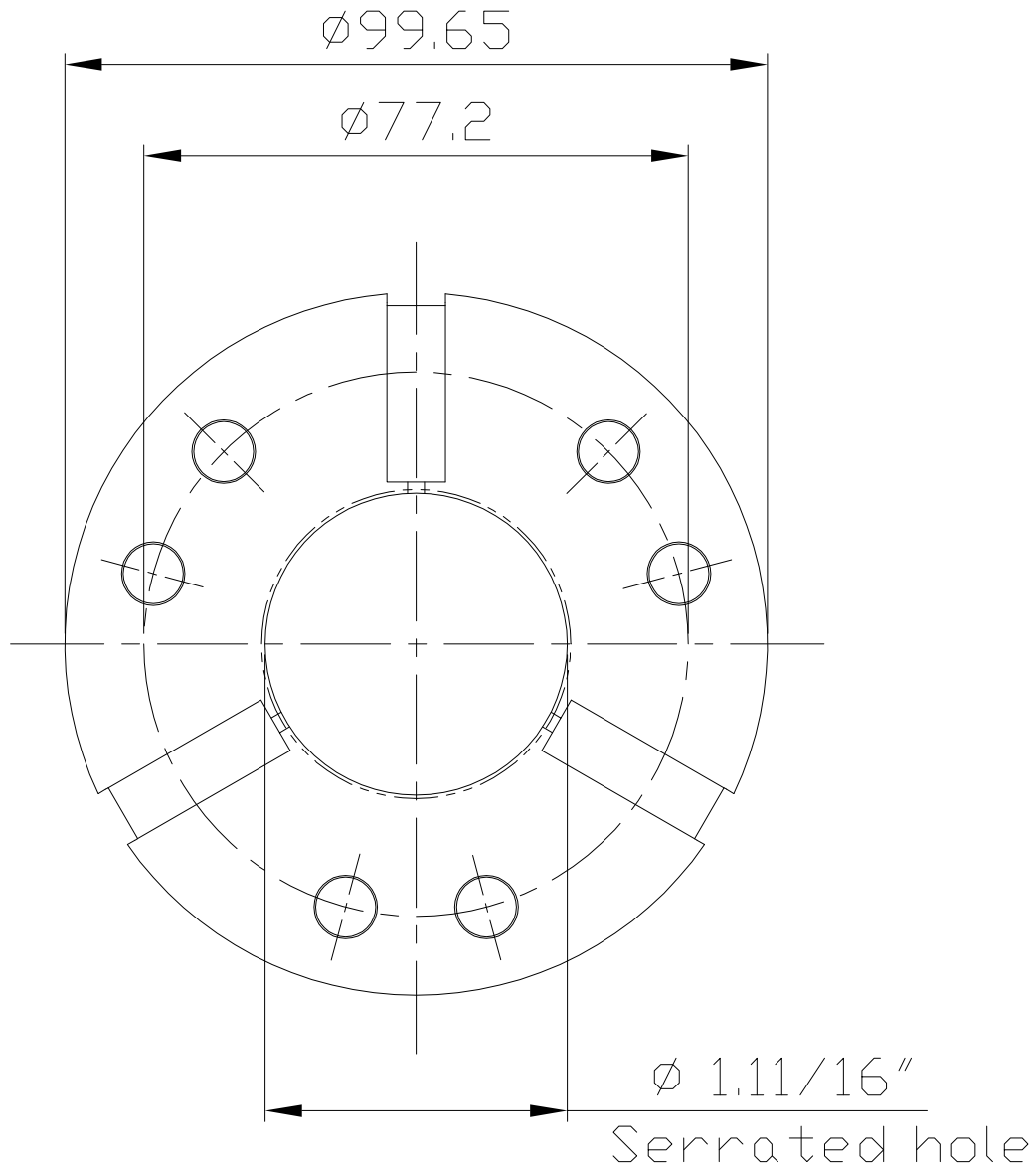

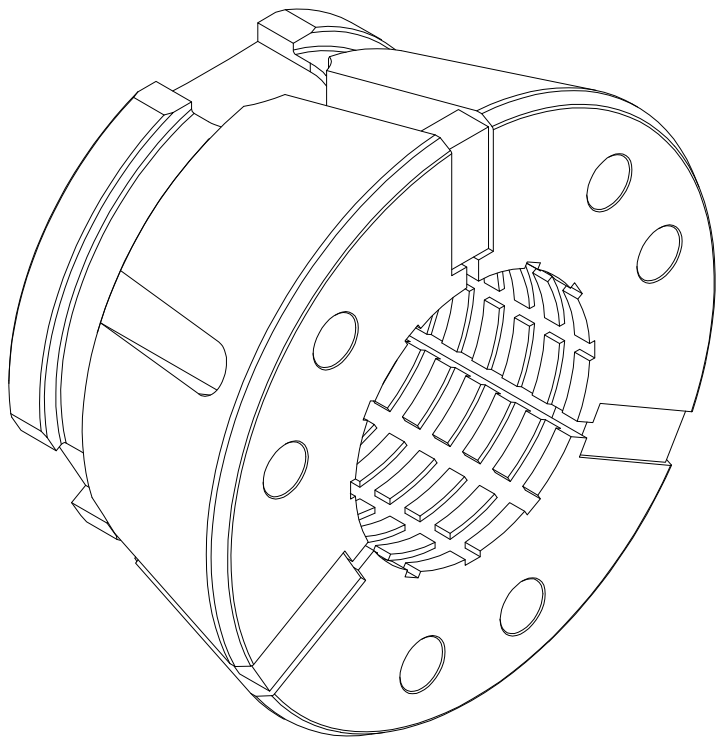

Serrated hole diagram

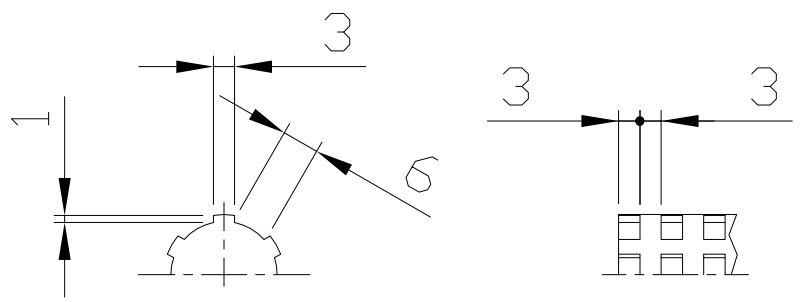

PROPRIETARY AND CONFIDENTIAL

THE INFORMATION CONTAINED IN THIS DRAWING IS THE SOLE PROPERTY OF LYNDEX NIKKEN. ANY REPRODUCTION IN PART OR AS A WHOLE WITHOUT THE WRITTEN PERMISSION OF LYNDEX NIKKEN IS PROHIBITED. DRAWING SUBJECT TO CHANGE WITHOUT NOTICE.

	NAME	DATE
DRAWN		

NOTES:

DESC.

LYNDEX NIKKEN

SIZE	DWG. NO.	REV.
A3	QCFC65-108-SER	
SCALE 1:1		SHEET 1 OF 1

5 4 3 2 1