Symbol	Date	Rev.by	Notice	Check
△1 x 3	220401	Shibata	modify	
△2 x				
△3 x				
△4 x				

NIKKEN KOSAKUSHO WORKS., LTD. All Rights Reserved .

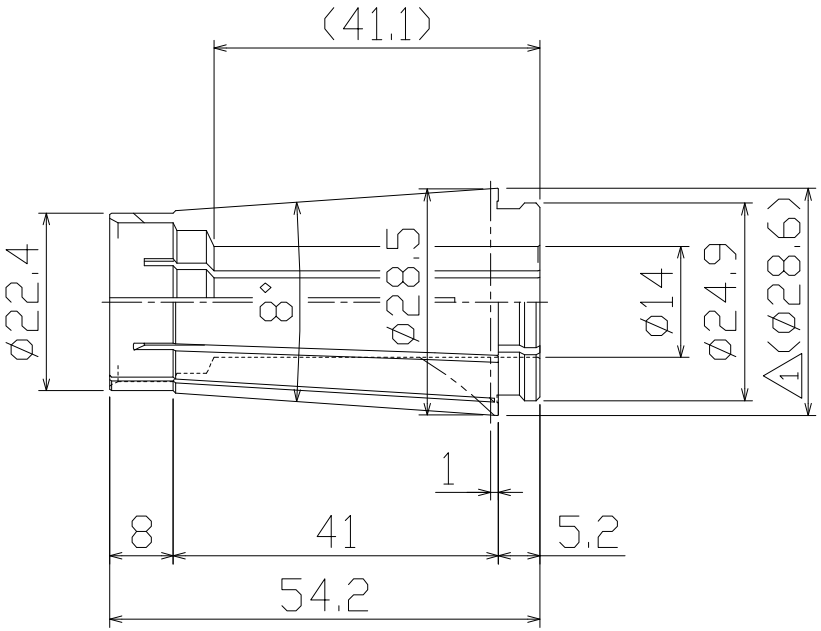

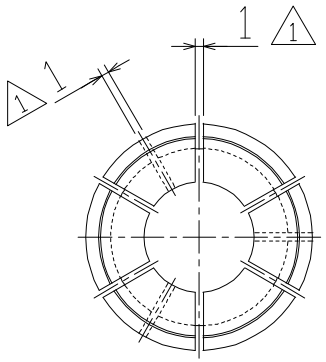

KIND SK20	TITLE SLIM CHUCK COLLET	CUSTOMER		
MACHINE MODEL	CODE NO. SK20-14A	DESIGNED Maemura	CHECKED	APPROVED
SCALE 1 : 1	NIKKEN KOSAKUSHO WORKS, LTD.	DIR-NAME	SJA1	
DATE 2013. 06. 14		DRWG NO.	SJA29-02003/1	